Design Process Planning and Management

Lab manual for

EX-01: Stress analysis of a rectangular plate with circular hole

Submission By
Roll No:
Name:

Faculty:
Dr. K. Anandavel
Anandavel.k@vit.ac.in
anandavelvit@gmail.com

Room: 313-A43, SJT

EX01-Stress analysis of a rectangular plate with a circular hole

Target Date: 22 Dec 22

AIM

Perform linear static stress analysis a given rectangular plate with circular hole a) to estimate the stress concentration factor using full model and half symmetric model b) to study the mesh convergence effect on the results

Tool : Fusion 360

Approach: Finite element simulation

EX01-Stress analysis of a rectangular plate with a circular hole

Simulation Input

Geometric dimension of plate with a hole

Geometric dimensions are in mm

Material Steel

Load: Pressure application of 50 MPa

Boundary condition
Full model – One end of plat is constrained in all translational DOF

Half symm model- Normal DOF also constrained in half symmetric plane

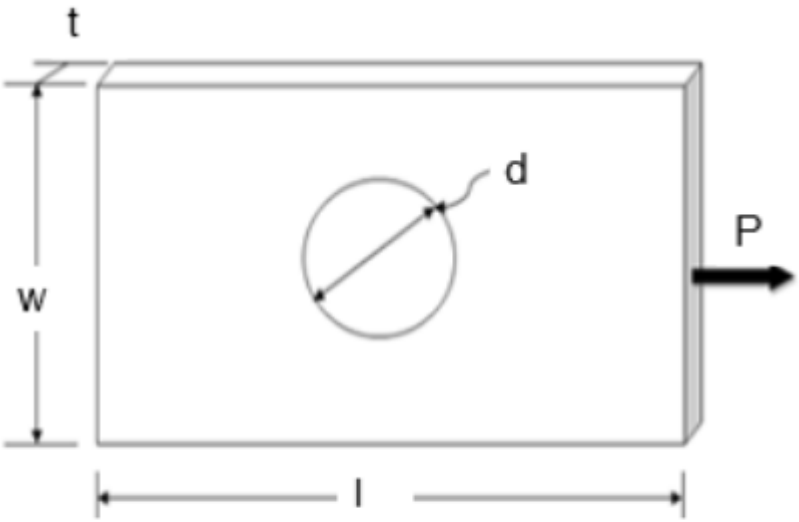

l = 200 mm
w = 100 mm
t = 20 mm
d = 30 mm
Pressure P= 50 N/mm^2

Full model

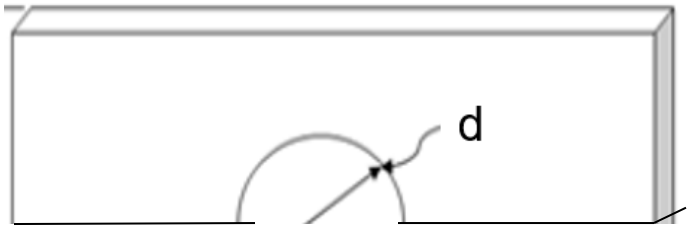

Half symmetric model

EX01-Stress analysis of a rectangular plate with a circular hole

Procedure

1. Make a sketch to the dimensions shown in figure (a). Note geometric input should be in 'mm'
2. Extrude the sketch and model full plate with a circular hole
3. Save model EX01_ Roll No
4. Go to simulation menu
5. Make analysis setup – Linear static stress analysis
6. Assign steel material to the geometric body
7. Define loads and BC
   - Constrain all DOF on the left side surface
   - Apply pressure load on the right surface

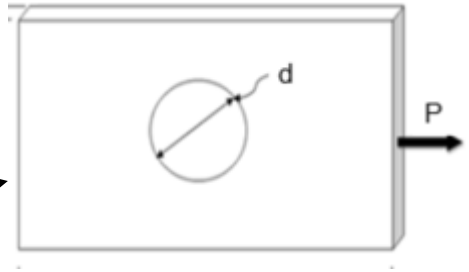

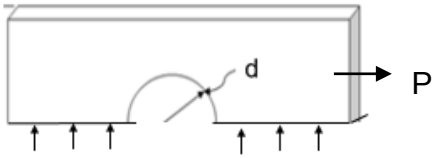

8 Define meshing parameter with the average size as 10 mm
9 Generate mesh
10 Check the model for input definition completeness
11 Solve the model
12 Post process the model to extract stress (von-Mises and axial stress), deflection plot
13 Save model
14 Refine the mesh and analyse (Three iterations) – Absolute size 5 mm, 3 mm and local refinement around hole 1.5 mm and extract peak stress
15 Repeat the steps 1-13 for half symmetric model, with the converged mesh size for full model
16 Save model
17 Tabulate the peak axial stress, deflection results and compute SCF for all the four analysed cases
18 Organise the axial and von-Mises stress plots and axial (loading direction)deflection plots

Upload the PDF of this completed report in Fusion 360 and VTOP.
All the models version to be stored in your folder

EX01-Stress analysis of a rectangular plate with a circular hole

Nominal stress calculation

Nominal stress xx = Load/((w-d)*t)

Load = pressure *w*t

SCF= Peak stress from Analysis/Calculated Nominal stress

EX01-Stress analysis of a rectangular plate with a circular hole

Table 1: Stress analysis results summary

Analysis case	Model	Global element size	Max axial		Max von-Mises	SCF = (Peak /Nominal stress)
			Stress MPa	Deflection mm	Stress MPa	
1	Full	10	158.3	0.05312	148.5	2.216
2	Full	5	175.3	0.05324	168.1	2.4541
3	Full	3	175.7	0.05325	170	2.4597
4	Full	Local refinement 1.5	176.1	0.05326	170.1	2.4650
5	Half Symmetric	Mesh converged for full model	167.2	0.05294	158.4	2.3407

EX01-Stress analysis of a rectangular plate with a circular hole

Figures:
Stress convergence plot (Iteration Vs Peak von-Mises stress)

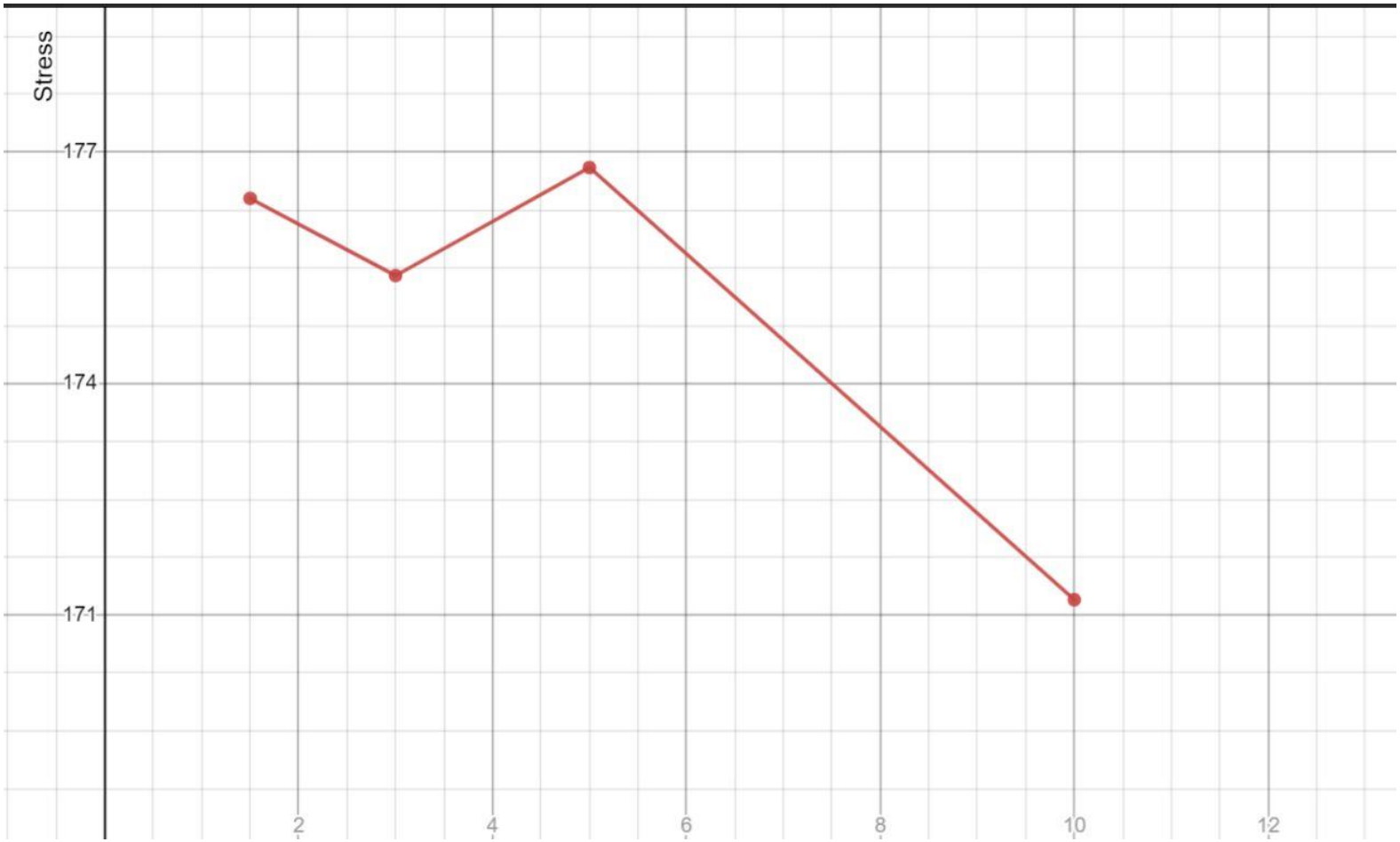

EX01-Stress analysis of a rectangular plate with a circular hole

Figures:
Case 1 : Axial stress Plot, Axial deflection plot

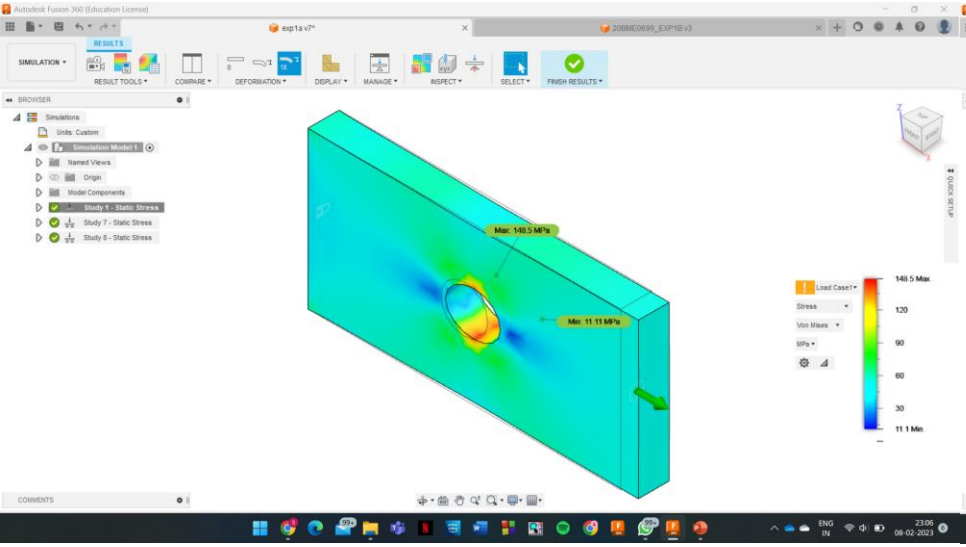

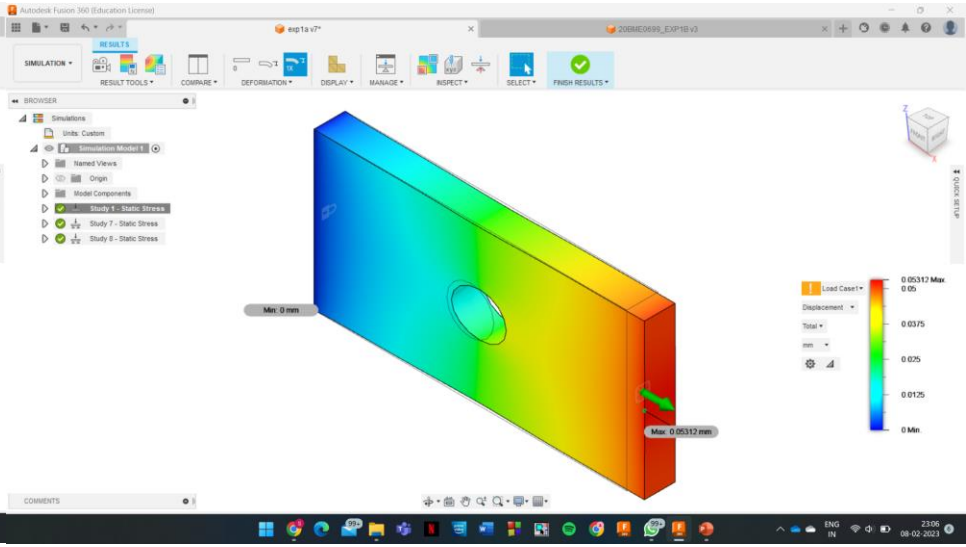

EX01-Stress analysis of a rectangular plate with a circular hole

Figures:
Case 2 : Axial stress Plot, Axial deflection plot

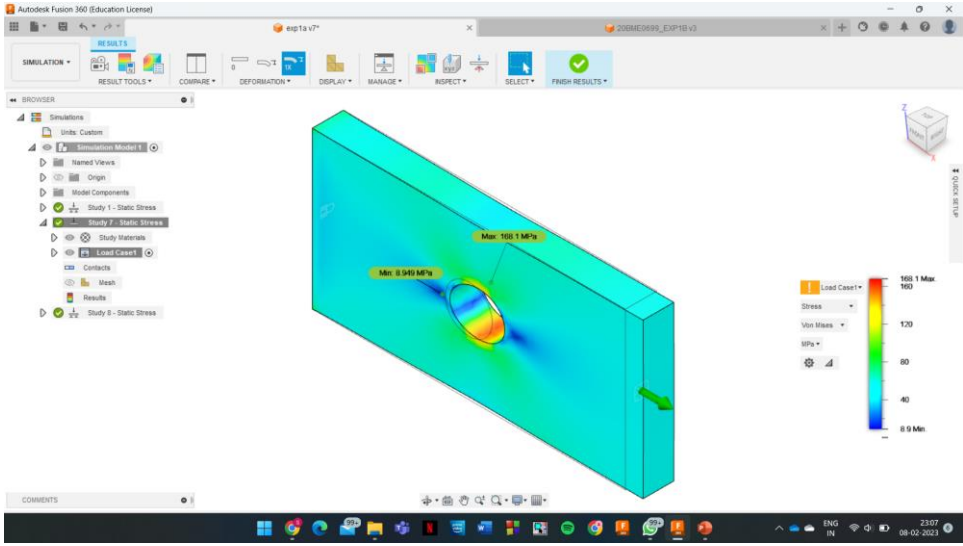

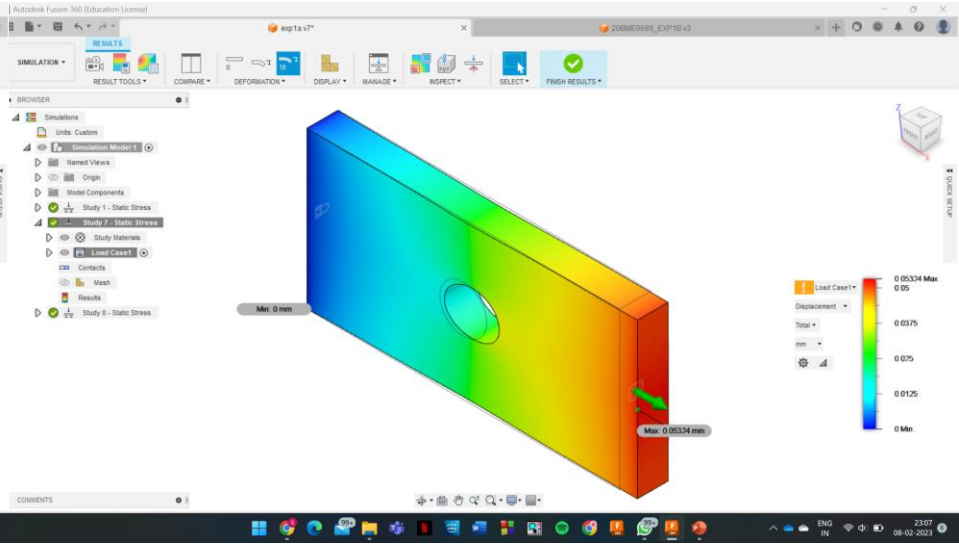

EX01-Stress analysis of a rectangular plate with a circular hole

Figures:
Case 3 : Axial stress Plot, Axial deflection plot

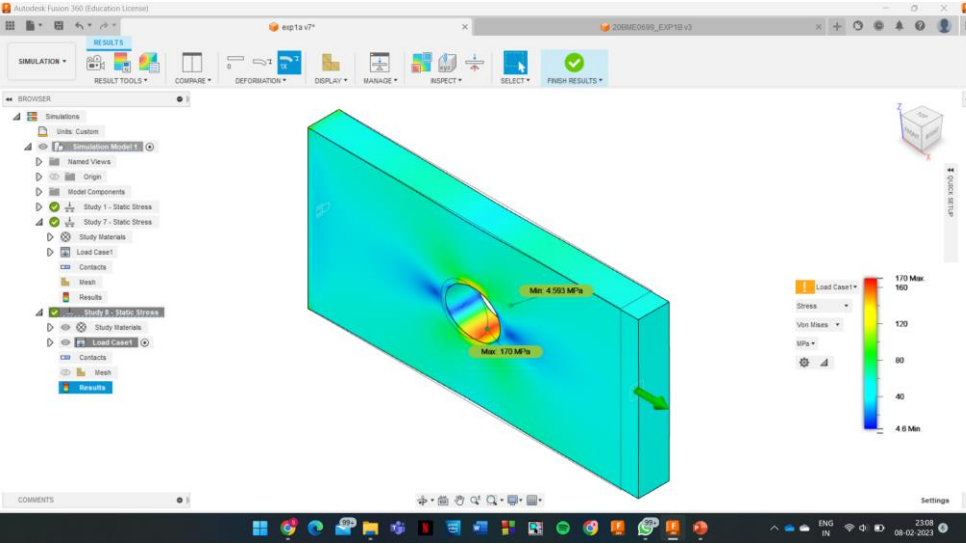

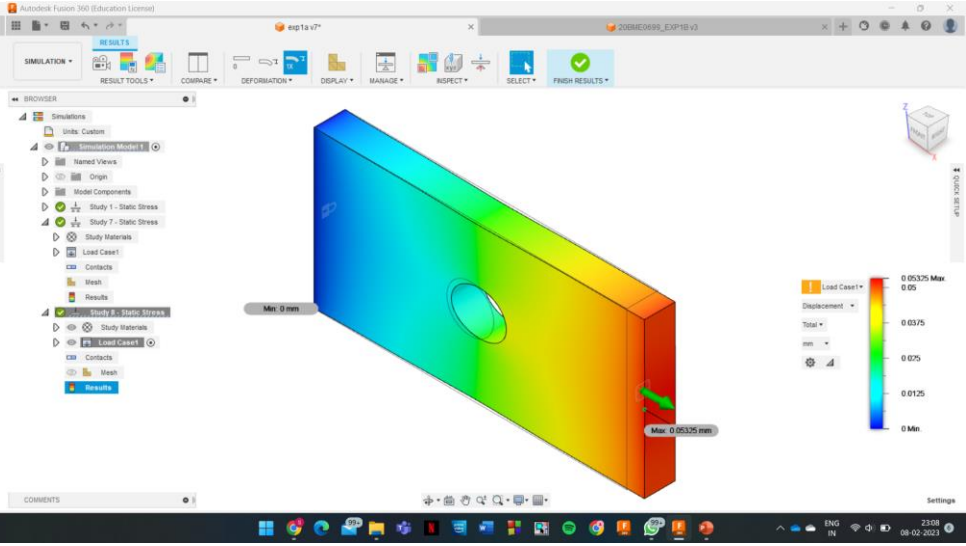

EX01-Stress analysis of a rectangular plate with a circular hole

Figures:
Case 4 : Axial stress Plot, Axial deflection plot

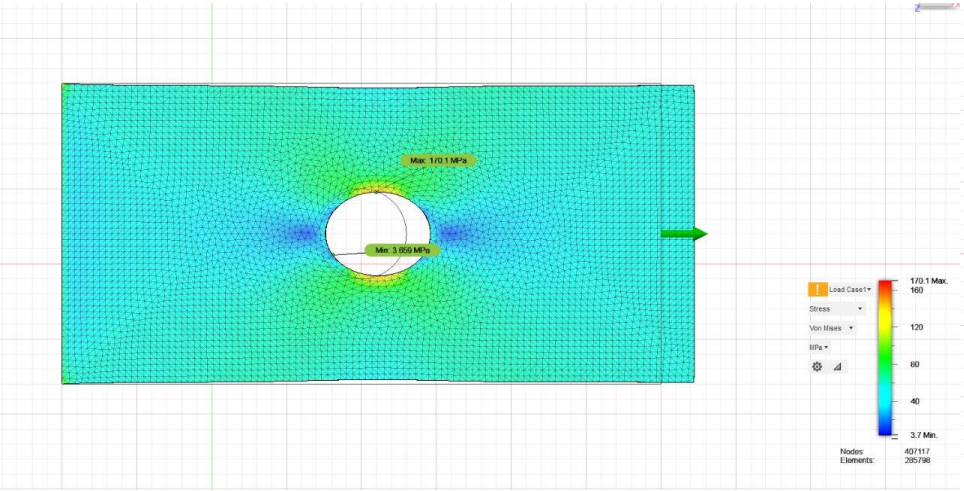

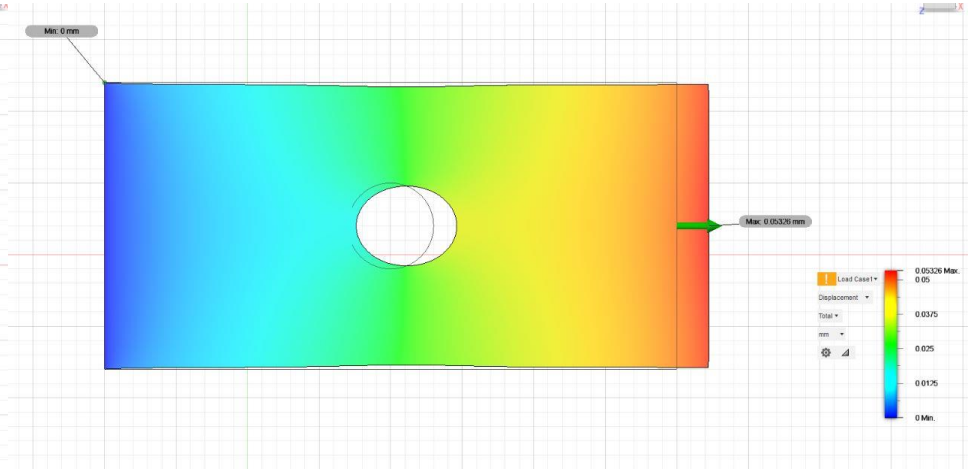

EX01-Stress analysis of a rectangular plate with a circular hole

Figures:
Case 5 : Axial stress Plot, Axial deflection plot

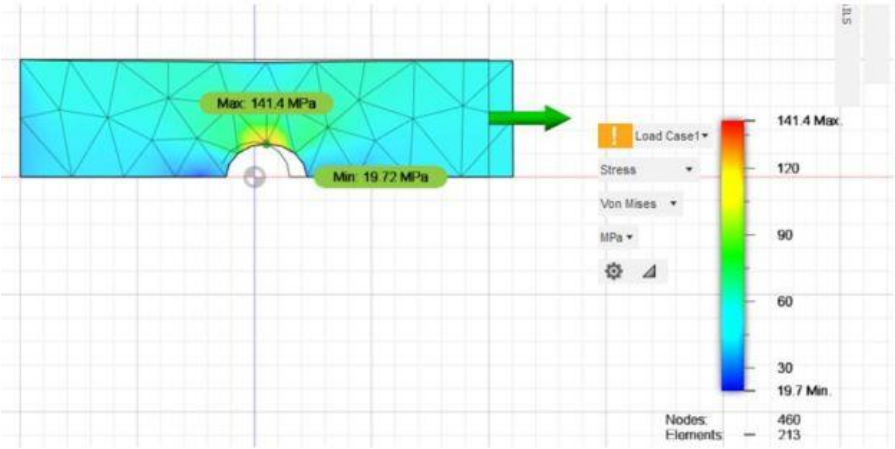

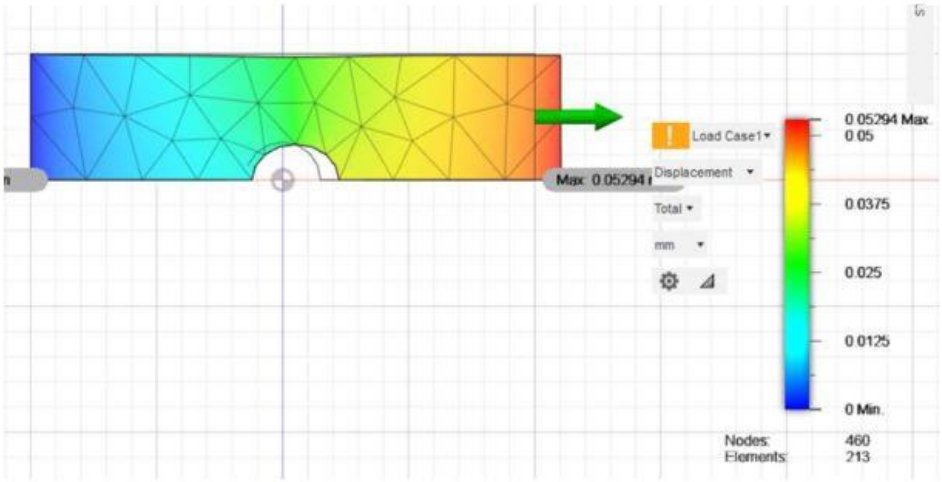

20BME0699
SUJAL SRIVASTAVA